九十八學年度四年制二、三年級轉學生招生考試

四技三年級　能源與冷凍空調工程系

第三節　專業科目（二）冷凍空調與原理　試題

注意事項：

1. 本試題共 5 題，配分共 100 分。
2. 請標明大題、子題編號作答，不必抄題。
3. 全部答案均須在答案卷之答案欄內作答，否則不予計分。

1. Compute the power required to compress 1.5kg/s of saturated ammonia vapor from a pressure 429.4kPa to 1555kPa . (20%)

2. Please explain the function of compressor in a vapor compression cycle. (10%)

3. A building has a total cooling load of 300kW. The latent portion of the load is 73.2 kW. The space is to be maintained at 25℃ db and 50% relative humidity. Outdoor air is at 38℃ and 50% relative humidity, and 10% by mass of the air supplied to the space is outdoor air. Air is to be supplied to the space at 18℃. Assume sea level pressure and find:

(a) The minimum amount of air supplied to the space in m^3/s (10%)

(b) The capacity, apparatus dew point, by pass factor, and SHF of the cooling coil. (20%)

4. What is the LMTD (logarithmic-mean temperature difference)? (10%)

5. A two-stage ammonia system using flash-gas removal and intercooling operates on the cycle shown in Fig. 1. The condensing temperature is 40℃. The saturation temperature of the intermediate-temperature evaporator is 0℃, and its capacity is 100 kW. The saturation temperature of the low-temperature evaporator is -40℃, and its capacity is 200 kW. Calculate the power required by the compressors? Assume that refrigerant enters the low-stage and high-stage compressors as saturated vapor and leaves condenser without subcooling. (30%)

Table 1 Properties of ammonia saturated liquid and vapor

Temp [C]	Pressure [MPa]	Volume (f) [m^3/kg]	Volume (g) [m^3/kg]	Enthalpy (f) [kJ/kg]	Enthalpy (g) [kJ/kg]	Entropy (f) [kJ/K-kg]	Entropy (g) [kJ/K-kg]
-40	0.0717	0.00145	1.55300	0.00	1389	0.0000	5.96
-30	0.1194	0.00148	0.96400	44.43	1404	0.1863	5.78
-20	0.1901	0.00150	0.62370	89.38	1419	0.3670	5.62
-10	0.2907	0.00153	0.41830	134.80	1432	0.5425	5.47
0	0.4294	0.00157	0.28930	180.80	1443	0.7133	5.33
10	0.6150	0.00160	0.20540	227.40	1453	0.8796	5.21
20	0.8575	0.00164	0.14920	274.60	1461	1.0420	5.09
30	1.1670	0.00168	0.11050	322.60	1467	1.2010	4.98
40	1.5550	0.00173	0.08310	371.50	1471	1.3580	4.87

Table 2 Properties of superheated ammonia
Saturation = 0℃, p= 0.4294MPa

Temp [C]	Volume [m^3/kg]	Enthalpy [kJ/kg]	Entropy [kJ/K-kg]
75	0.3860	1624	5.922
76	0.3872	1627	5.929
77	0.3884	1629	5.935
78	0.3896	1631	5.942
79	0.3908	1633	5.948
80	0.3921	1636	5.955
81	0.3933	1638	5.961
82	0.3945	1640	5.968
83	0.3957	1643	5.974
84	0.3969	1645	5.981
85	0.3981	1647	5.987

Table 3 Properties of superheated ammonia
Saturation = 40℃, p=1.5554MPa

Temp [C]	Volume [m^3/kg]	Enthalpy [kJ/kg]	Entropy [kJ/K-kg]
90	0.1048	1620	5.311
91	0.1052	1622	5.318
92	0.1056	1625	5.325
93	0.1060	1628	5.333
94	0.1064	1630	5.340
95	0.1068	1633	5.347
96	0.1072	1636	5.354
97	0.1075	1638	5.362
98	0.1079	1641	5.369
99	0.1083	1644	5.376
100	0.1087	1646	5.383

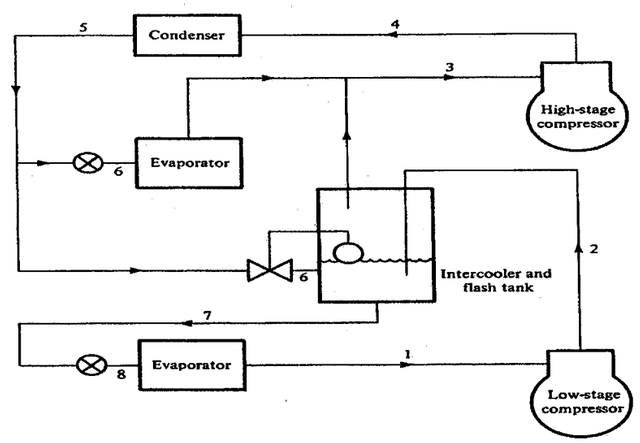

Figure 1 Two compressors and two evaporators operating with intercooling and flash-gas removal

注意：背面尚有參考資料

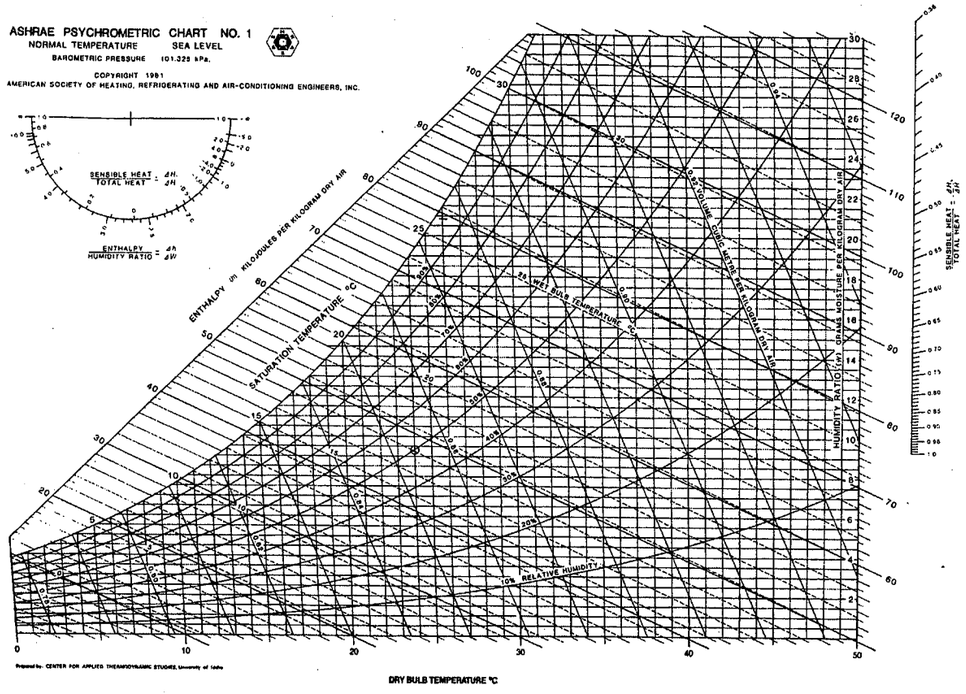

Figure 2. Psychrometric chart at sea level