國立臺北科技大學

九十六學年度四年制二、三年級轉學生招生考試

系所組別：四技三年級車輛工程系

第三節　專業科目（二）應用力學（靜力學與動力學）試題

注意事項：

1. 本試題共五題，配分共 100 分。
2. 請標明大題、子題編號作答，不必抄題。
3. 全部答案均須在答案卷之答案欄內作答，否則不予計分。

1. Two tractors pull on the tree with the forces shown. Represent each force as a Cartesian vector and then determine the magnitude and coordinate direction angles of the resultant force.(配分 20 分)

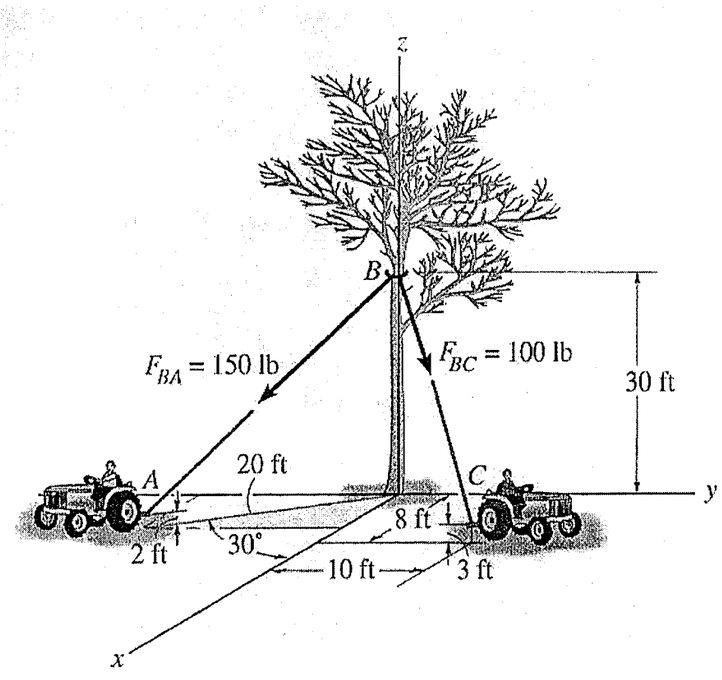

2. The towline exerts a force of P = 4 kN at the end of the 20-m-long crane boom. If θ= 30°, determine the placement x of the hook at A so that this force creates a maximum moment about point O. What is this moment? (配分 20 分)

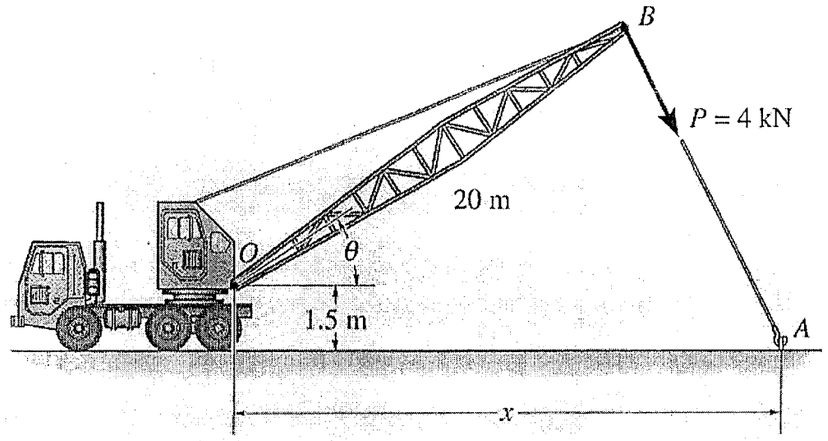

3. Determine the force in each member of the truss. State whether the members are in tension or compression. Set P = 8 kN. (配分 20 分)

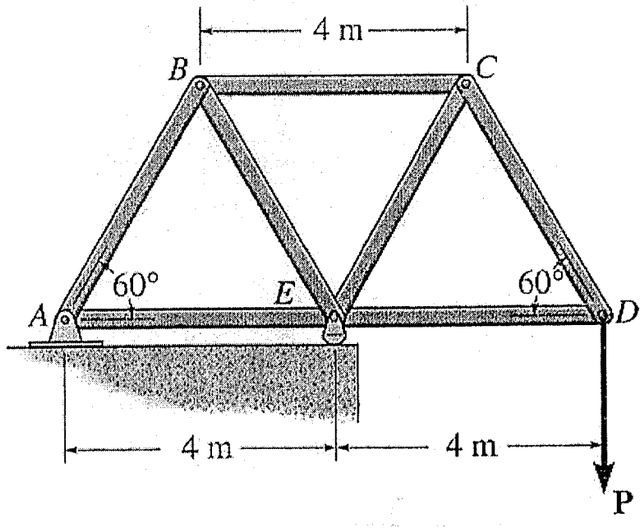

注意：背面尚有試題

4. The automobile has a speed of 80 ft/s at point A and an acceleration **a** having a magnitude of 10 ft/s^2, acting in the direction shown. Determine the radius of curvature of the path at point *A* and the tangential component of acceleration. (配分 20 分)

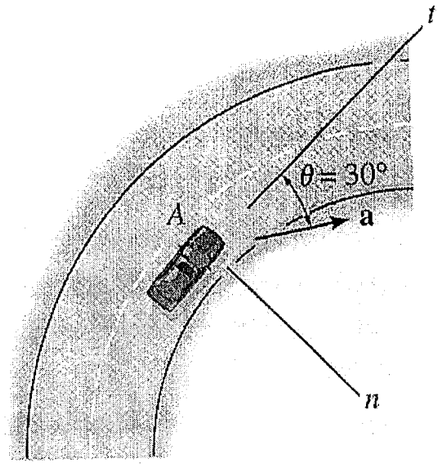
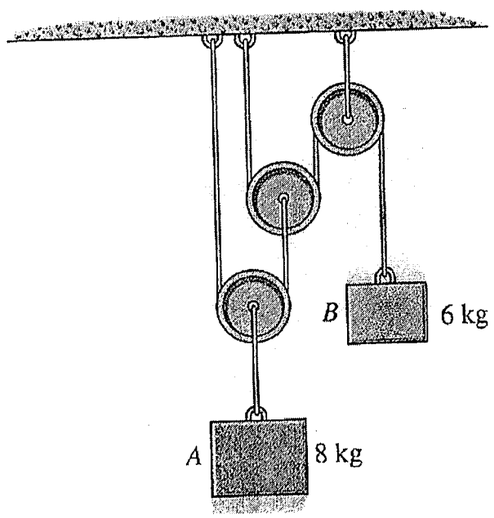
5. Determine the tension developed in the cords attached to each block and the accelerations of the blocks. Neglect the mass of the pulleys and cords. (配分 20 分)