國立臺北科技大學

九十五學年度機電科技研究所電資碩士在職專班入學考試

乙組：系統概論 試題

填准考證號碼　　第一頁　共二頁

注意事項：

1. 本試題共【9】題，配分共 100 分。
2. 請按順序標明題號作答，不必抄題。
3. 全部答案均須答在試卷答案欄內，否則不予計分。

1. For the inverting rectifier circuits
   (a) Each diode in Fig.1 has parameters of forward diode voltage $V_r = 0.7$V and $r_f = 0$. Assume v_i is 5V sine wave, please plot the output voltage v_o. (5%)
   (b) Each Zener diode in Fig.2 has forward Zener voltage $V_r = 0.7$V and reverse Zener voltage $V_z = 8$V. Assume v_i is 5V sine wave, please plot the output voltage v_o. (5%)

   (You should make clearly the voltage levels and timing information on your plot for problem1)

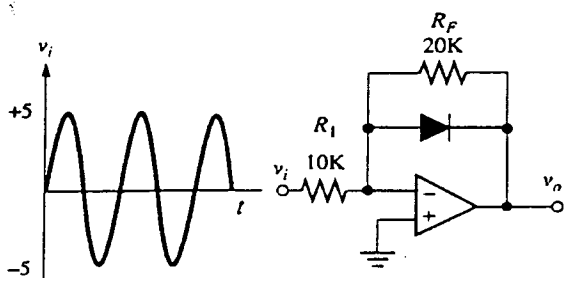

Fig.1 Circuit for problem 1.(a)

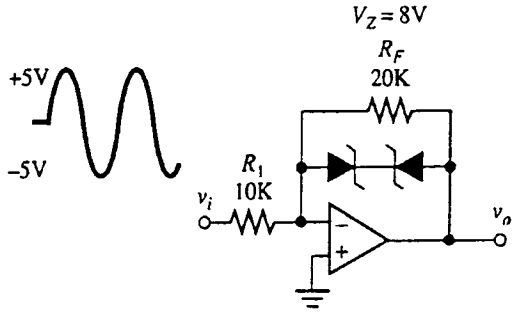

Fig.2 Circuit for problem 1.(b)

2. Fig.3 shows how we can use the inverting summer to build a 4-bit digital-to-analog converter. The voltage v_1 through v_4 are provided by the output bus of a 4-bit computer and represent either a logical HIGH (1) or a logical LOW (0). The sequence of voltages represent a 4-bit binary number, which v_1 being the most significant bit (MSB) and v_4 being the least significant bit (LSB).
   (a) Please find output v_o as a function of v_1 through v_4. (5%)
   (b) Assume that a logic HIGH is represented by 1V and a logic LOW is represented by 0V. Find the output voltage v_o if $(v_1, v_2, v_3, v_4) = (1, 1, 0, 1)$. (5%)

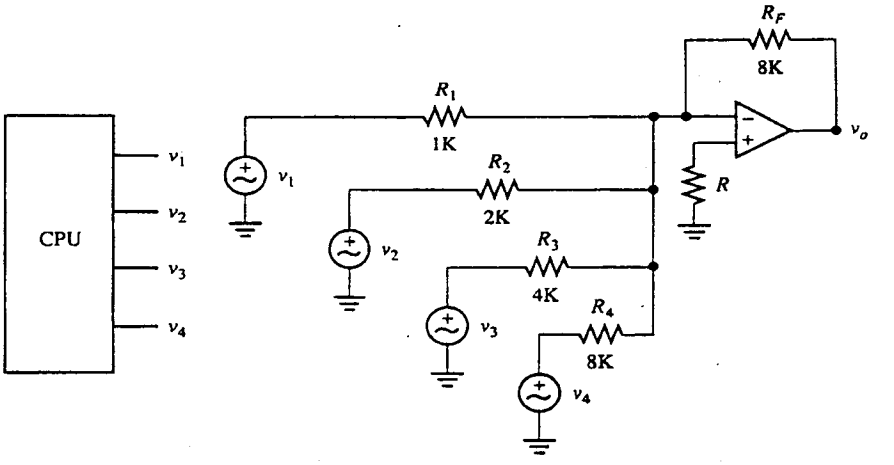

Fig.3 A 4-bit digital-to-analog converter circuit

3. For the circuit in Fig.4, assume the transistor parameters are β=100, V_{BE}(on)=0.7V
   (a) Please calculate the I_C. (5%)
   (b) Please calculate the power dissipated (P) by the transistor Q. (5%)

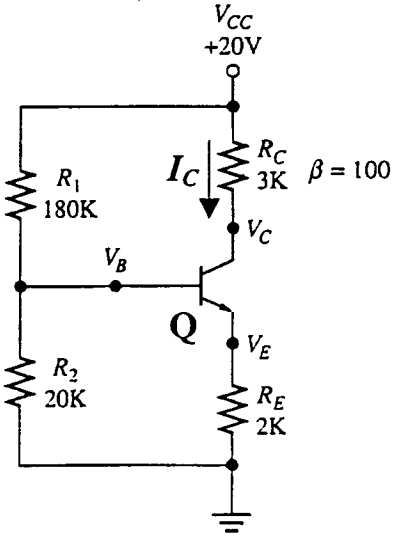

Fig.4 Circuit for problem 3

注意：背面尚有試題

4. Draw a voltage supply circuit with input AC 110 V_{rms} and output of +5V. Please use a full-wave bridge rectifier, capacitor filter, and a three-terminal voltage regulator IC(7805) to provide an output of +5V. (10%)

5. An active filter is shown in Fig.5.
   (a) Find the cut-off frequency f_L of this filter. (5%)
   (b) Sketch the Bode gain plot for this filter. (5%)

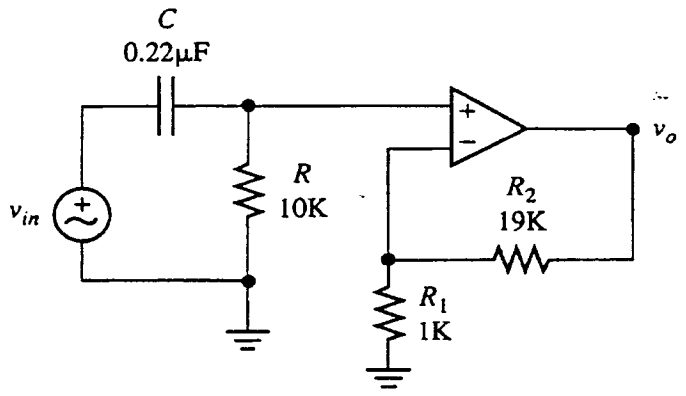

Fig.5 An active filter circuit for problem 5

6. Please explain the following terms briefly.
   (a) Thrashing in memory system (5%)
   (b) Embedded system (5%)
   (c) ActiveX control (5%)
   (d) Binary search (5%)

7. Please design a 2-bit adders using look-ahead carry method. (10%)

8. Assume that X and Y are two 4-bit unsigned integers.
   (a) Please use full adders and AND gates to design a 4×4 bit array multiplier for unsigned numbers. (7%)
   (b) Please show the critical path in your multiplier. (3%)

9. For a program statement "ANS = A− 3/B" (Assume ANS and A、B are real number)
   (a) Please show the syntax tree of this statement. (4%)
   (b) Please use this statement as an example to describe the phases of a compiler. (6%)