國立臺北科技大學

九十二學年度電腦通訊與控制研究所入學考試

電子學（丙組）試題

填准考證號碼　　第一頁　共二頁

注意事項：

1. 本試題共【六】題，配分共 100 分。
2. 請按順序標明題號作答，不必抄題。
3. 全部答案均須答在答案卷之答案欄內，否則不予計分。

1. Consider the oscillator circuit in Fig. P1, and assume for simplicity that $\beta = \infty$.
   (a) (3%) Find the frequency of oscillation.
   (b) (5%) What is the minimum value of R_C (in terms of the bias current I) for oscillation to start.
   (c) (10%) If R_C is selected equal to $(1/I)\,\mathrm{k\Omega}$, where I is in milliamperes, convince yourself that oscillations will start. Estimate the peak-to-peak amplitude of the output sine wave V_0.

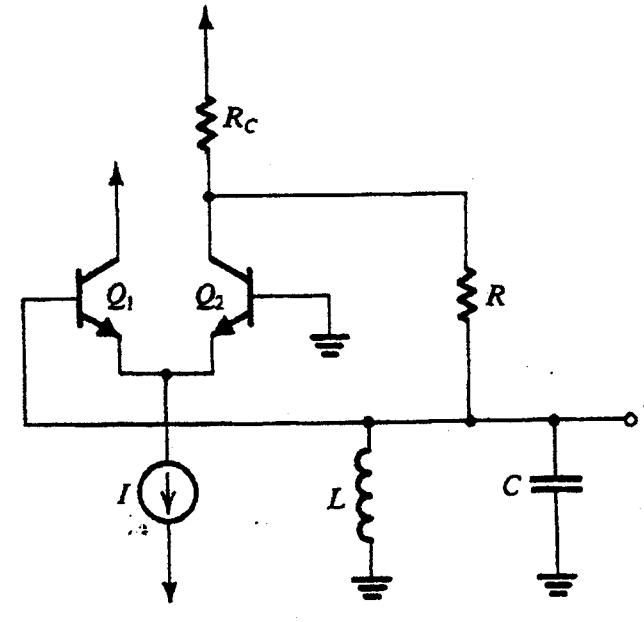

Fig. P1

2. (20%) The BJT is a three-terminal device that can be converted into a two-port network by grounding one of its terminals. It therefore can be characterized by one of the various two-port parameter sets. For the BJT at low frequencies, the h parameters have been found to be the most convenient. If the h parameters were measured on a BJT biased at $I_C = 1\,\mathrm{mA}$: $h_{ie} = 2.6\,\mathrm{k\Omega}$, $h_{fe} = 100$, $h_{re} = 0.5\times10^{-4}$, $h_{oe} = 1.2\times10^{-5}$ A/V, determine the hybrid-π component values of g_m, r_π, r_x, r_μ, and r_o.

3. Fig. P3 shows a single-amplifier biquadratic active filter. Let $C_1 = C_2 = C$, $R_3 = R$, $R_4 = R/4Q^2$, $CR = 2Q/\omega_0$ and assume that the op amp is ideal.
   (a) (10%) Analyze the circuit to find its transfer function V_o/V_i.
   (b) (6%) What is the voltage-divider ratio $R_2/(R_1+R_2)$ so that the circuit realizes an all-pass function?
   (c) (6%) What is the voltage-divider ratio $R_2/(R_1+R_2)$ so that the circuit realizes a notch function?

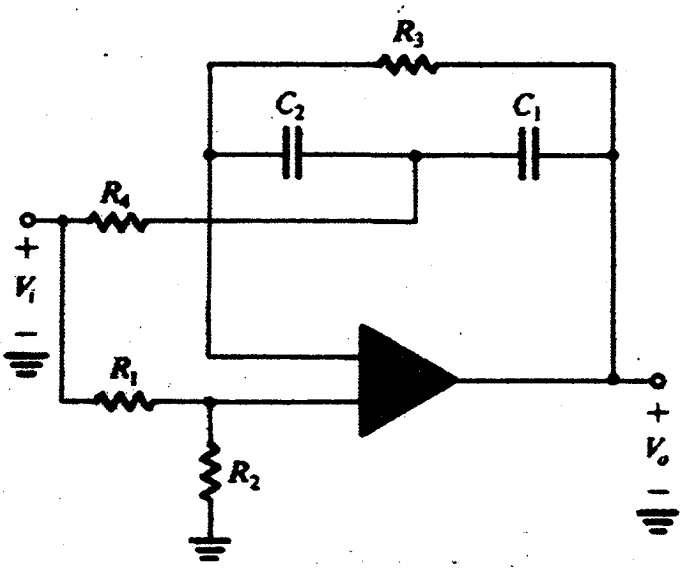

Fig. P3

4. Fig. P4 shows a circuit suitable for op amp applications. For all transistors $\beta = 100$, $V_{BE} = 0.7\,\text{V}$, and $r_o = \infty$.
   (a) (5%) For inputs grounded and output held at 0 V (by negative feedback) find the emitter currents of all transistors.
   (b) (10%) Calculate the gain $v_o/(v_+ - v_-)$ of the amplifier with a load of $10\,\text{k}\Omega$.
   (c) (5%) With load as in (b) calculate the value of the capacitor C required for a 3-dB frequency of 1 kHz.

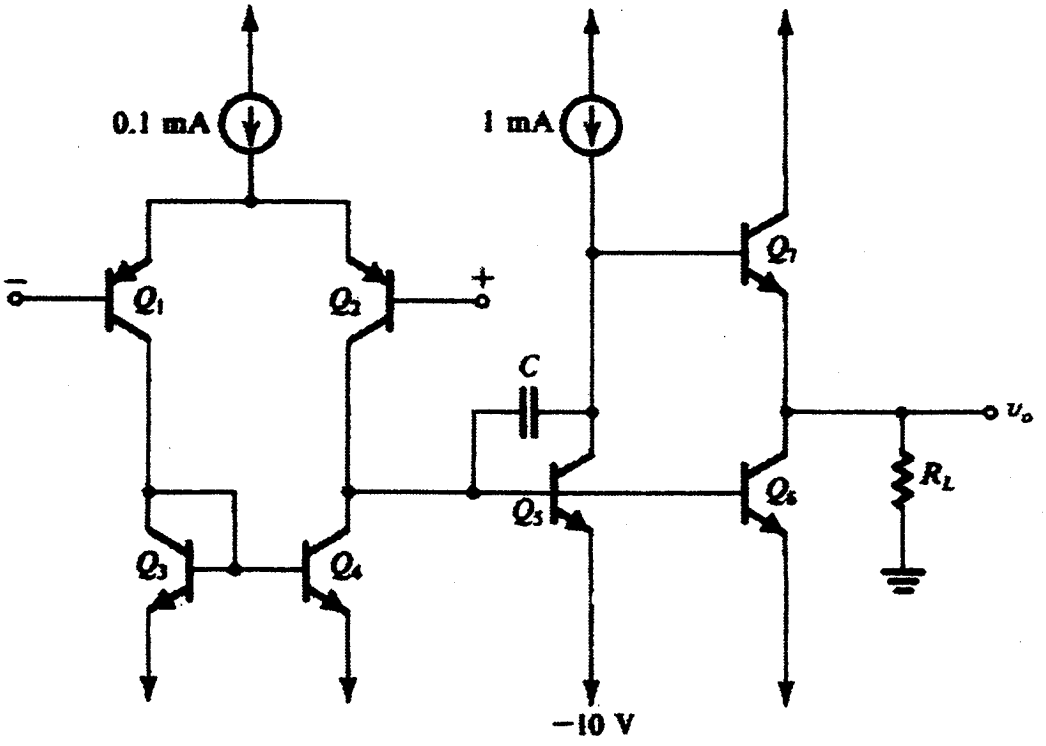

Fig. P4

5. (10%) For the circuit shown in Fig. P5, assume that the op amps and the diode are ideal. Analyze the circuit to find its transfer function V_o / V_i.

6. (a) (5%) For the circuit in Fig. P6, assume high β and BJTs having $v_{BE} = 0.7\,\text{V}$ at 1 mA. Find the value of R that will result in $I_O = 10\,\mu\text{A}$.

   (b) (5%) For the design in (a), find R_o assuming $\beta = 100$ and $V_A = 100\,\text{V}$.

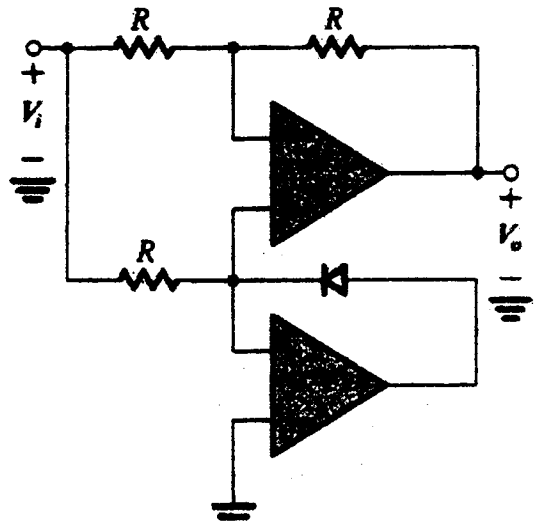

Fig. P5

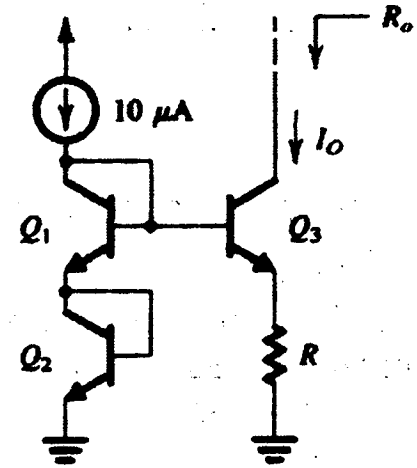

Fig. P6