107CC04

國立臺北科技大學 107 學年度碩士班招生考試

系所組別：2240 電子工程系碩士班丁組

第一節　電子學　試題

注意事項：

1. 本試題共四題，共 100 分。
2. 請標明大題、子題編號作答，不必抄題。
3. 全部答案均須在答案卷之答案欄內作答，否則不予計分。

1. Fig.1 shows amplifier circuit, the MOSFET $M1$ and $M2$ are the same. If the threshold voltage is V_{th}=1.2V and $W\mu_n C_{ox}/L$=1.6 mA/V^2. The channel length modulation of the MOSFET is negligible. Based on the above specifications and device parameters, please calculate:
   (a) V_{GS1} (10%)
   (b) I_{DQ1} (5%)
   (c) g_{m1} (5%)
   (d) v_o/v_i (5%)

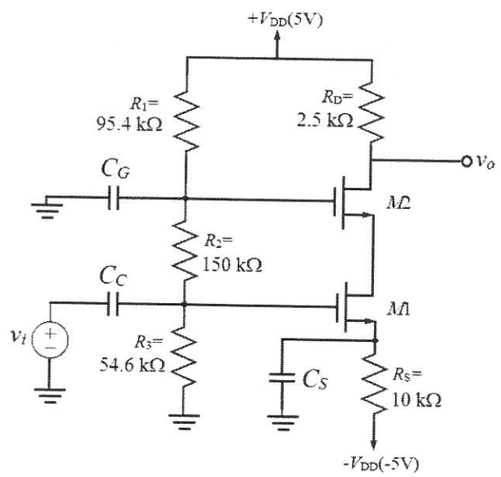

Fig.1

2. The summing amplifier in Fig. 2 has an op-amp with open-loop parameters: $A_{OL}=2\times10^3$, $R_i=\infty$, and $R_o=0$.
   (a) Determine the actual output voltage (v_o) as a function of v_{I1} and v_{I2}. (12%)
   (b) What is the percent error from the ideal value? (12%)

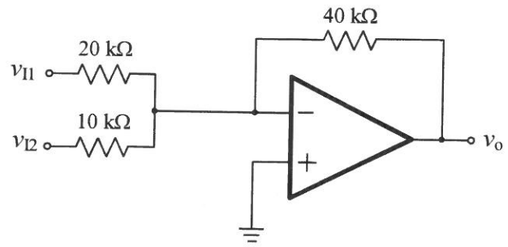

Fig.2

3. Consider the amplifier circuit shown in Fig. 3. The thermal voltage V_T=kT/q=25 mV, early voltage V_A=100V, β=100.
   (a) Find V_B、V_C and V_E. (9%)
   (b) Draw the low frequency hybrid-π equivalent circuit and determine the small-signal parameters r_π、g_m and r_o. (12%)
   (c) Find the small-signal voltage gain $A_v = v_o / v_s$. (6%)

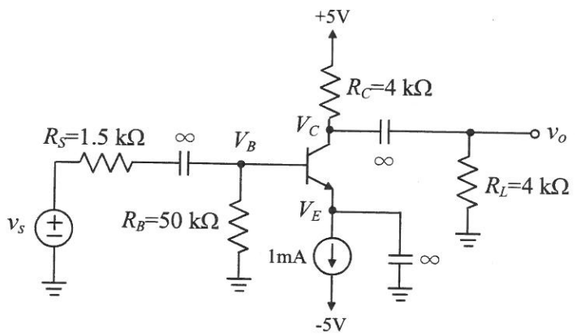

Fig.3

注意：背面尚有試題

4. Consider the circuit shown in Fig. 4. The value of g_m is 4 mA/V, R_{sig}=100 kΩ, R_S=100 Ω, R_L=5 kΩ, C_{gs}=C_{gd}=1 pF.

(a) Determine the mid-band voltage gain (V_0/V_{sig}) (12%)

(b) Determine the upper 3dB frequency (f_H) (12%)

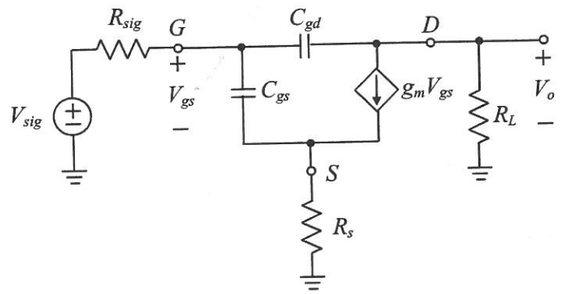

Fig. 4